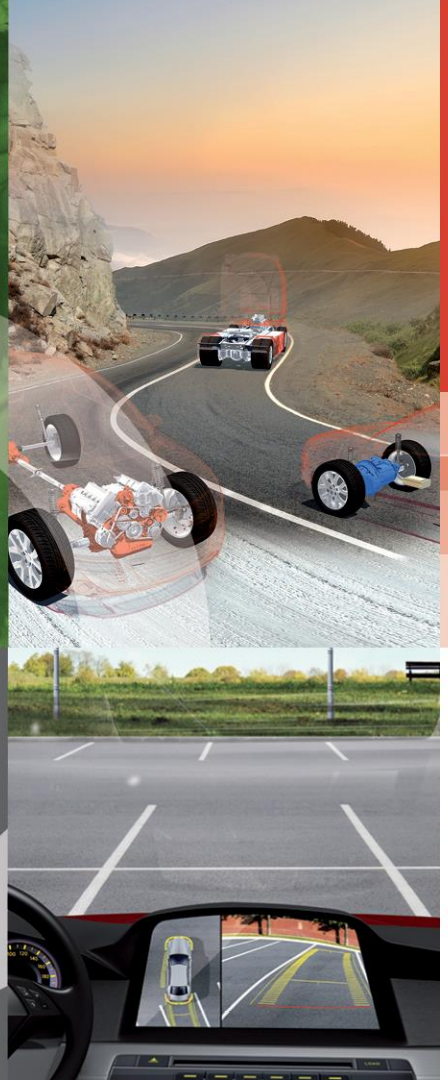

Highly Integrated Electrical Drive System

Robert Kremsl / Magna Powertrain

10.03.2016

Topics

- Magna Powertrain Company Overview
  - Responsibilities and Challenge at Engineering Center Traiskirchen
- Possibilities and Advantages of Electrical Drive Systems
- Challenges for Development
- What does Integration mean
- Magna Electrical Drive Systems in the Past and Future

Magna Powertrain

Company Overview

Magna International Management Structure

Don Walker	Chief Executive Officer
Vince Galifi	Chief Financial Officer
Jim Tobin	Chief Marketing Officer, President Magna Asia
Jeff Palmer	Chief Legal Officer
Tom Skudutis	COO Magna Exteriors, Seating, Mirrors, Closures and Cosma
Swamy Kotagiri	Chief Technology Officer
Marc Neeb	Chief Human Resources Officer
Guenther Apfalter	President Magna Europe
Mike Sinnaeve	VP Operational Improvement & Quality

Mike Bisson President	**Grahame Burrow** President	**Frank Seguin** President	**John Farrell** President	**Jake Hirsch** President	**Guenther Apfalter** President
SEATING	EXTERIORS	CLOSURES VISION SYSTEMS ROOF SYSTEMS	BODY & CHASSIS	POWERTRAIN ELECTRONICS	VEHICLE ENG CONTRACT MFG FUEL SYSTEMS

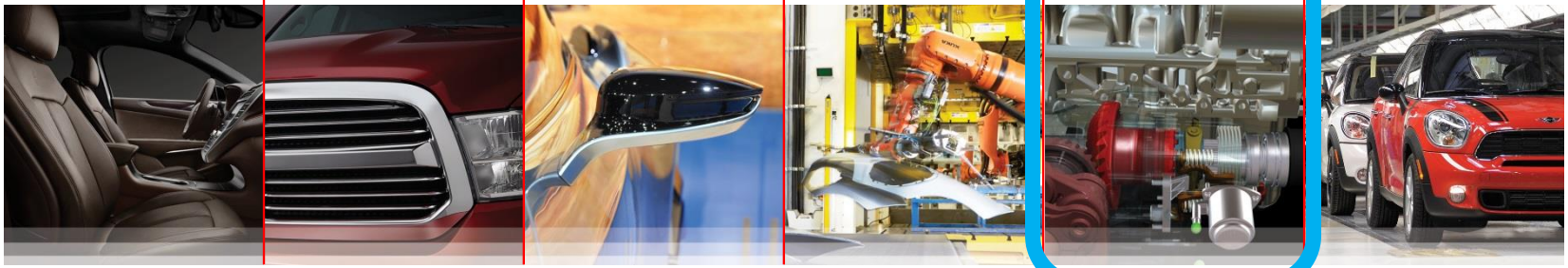

Magna Powertrain Global Presence

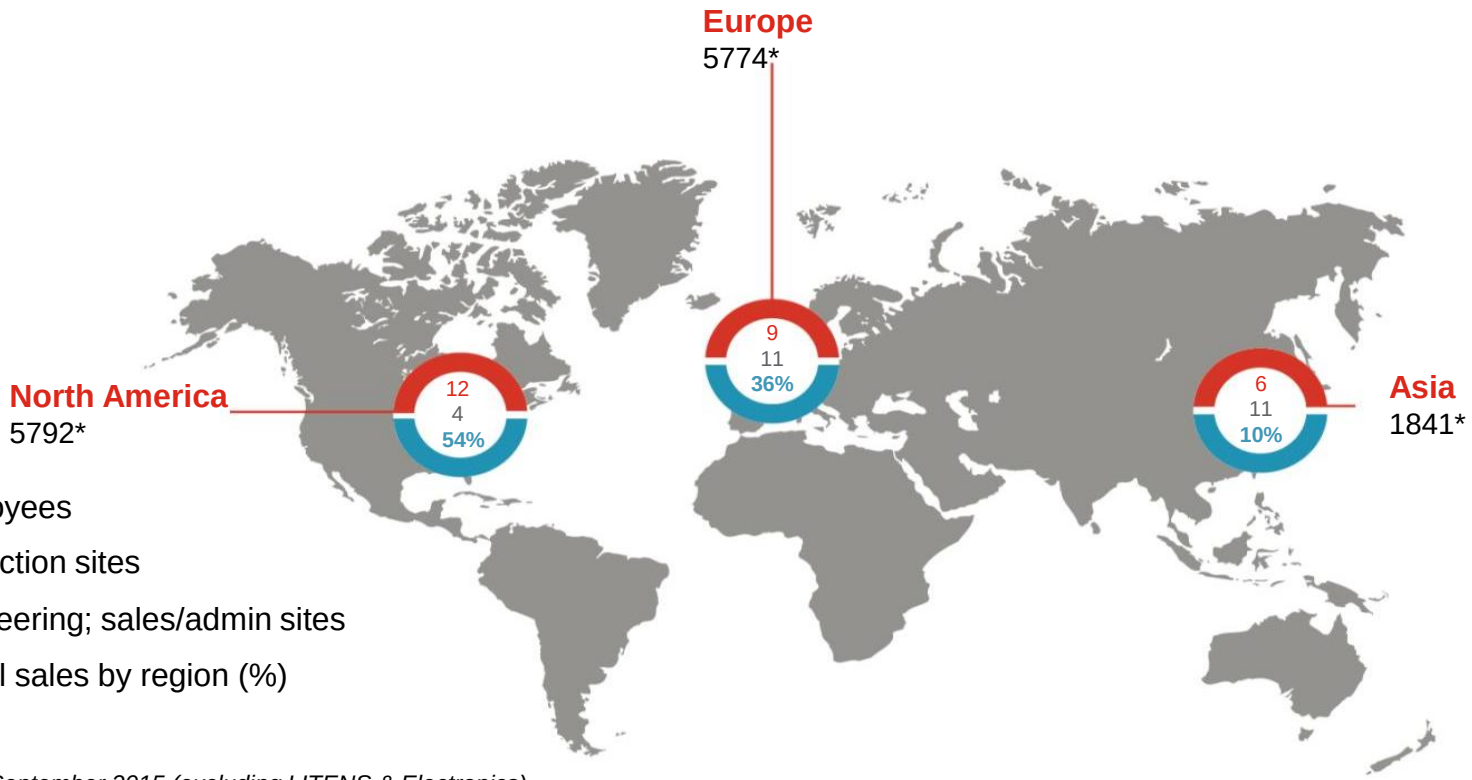

* Employees

- Production sites
- Engineering; sales/admin sites
- Global sales by region (%)

As of September 2015 (excluding LITENS & Electronics)

Some facilities may be double-counted in the breakdowns above (i.e. an office may be both a production office, as well as a sales office). Please reference the forthcoming maps for further clarification.

MPT's Portfolio

DRIVELINE SYSTEMS

- Actuators including System Control
- AWD/4x4 Disconnect Systems
- Coupling Systems
- Front and Rear Axle Drives
- Power Take-Off Units
- Rear Drive Modules
- Transfer Cases

FLUID PRESSURE & CONTROLS

- Engine Oil, Vacuum and Water Pumps
- Tandem Pumps
- Transmission Oil Pumps
- e-Pumps (Coolant, Oil, Purge, Vacuum)
- Integrated Engine Front Cover Modules
- Thermal Management Modules
- Electronic Cooling Fans
- High Pressure Hydraulic Pumps

METAL-FORMING SOLUTIONS

- Accessory Drives
- Clutch Hubs & Housings
- Flexplates
- Geared Products
- Oil Pan Modules
- Planetary Carriers
- Transmission Clutch Modules

ELECTRONICS

- Near Field Applications/ Multicamera Systems
- Far Field Applications/Data Processing
- Sensor Fusion Capabilities
- Control Units for different Applications
- Driver Assistance Systems
- Electronics Manufacturing Services

ENGINEERING SERVICES
(external & internal)

- Vehicle & Powertrain Engineering
- Testing Services
  - Engine
  - Drivetrain
  - Fatigue
  - Chassis Dyno
  - On-& Off Road
- Simulation & Technical Application Software
- Prototyping and Production

NEW and ADVANCED PRODUCTS

- e-Mobility Systems
  - **Electric axles**
  - Transmission for EV-/Hybrid including E-Motor and Inverter
  - Advanced charging systems
  - Electric auxiliaries
- Powertrain efficiency improvements
  - Advanced charging systems
  - Variable Valve Timing / Compression systems
  - Mechatronics actuators

Magna Powertrain - Global Organization Chart

PRESIDENT
Jake Hirsch

ADVANCED ENGINEERING
Dr. Claus Bischoff, Sr. VP

SALES & MARKETING
Peter Seidl, Sr. VP

FINANCE
Tom More, VP

GLOBAL MANUFACTURING STRATEGY/CAPEX/QUALITY
Manfred Kranner, Sr. VP

HUMAN RESOURCES
Brent Kearns, VP – NA/SA
Richard Piller, VP – EU/AP

PURCHASING
Steve Rush, VP

LEGAL
David Mimms, Secretary & General Counsel

Albersdorf – Bad Homburg* – Concord – Pune (JV) – St. Valentin* – Shanghai – Tokyo – Traiskirchen – Troy

DRIVELINE SYSTEMS Greg Deveson, Sr. VP	FLUID PRESSURE & CONTROLS Johann Ecker, Sr. VP	METAL-FORMING SOLUTIONS Tom Rucker, VP	ELECTRONICS Olaf Bongwald, VP
Albersdorf*	APT*	Amtek (JV)	Product Eng. Center Auburn Hills
Product Eng. Center Changzhou	Asan*	Product Eng. Center Concord	Product Eng. Center Brampton
Product Eng. Center Troy	Bad Homburg*	MSM	Product Eng. Center Munich
Ilz	Bangalore	Muncie	Product Eng. Center Sailauf
Lannach*	Benevento	Pullmatic	Holly
Lansing	Campiglione*	Rotoform	Product Eng. Center Hsinchu
Ramos Arizpe*	Changzhou*	Sterling Heights	Monterrey
Roitzsch	Product Eng. Center Concord	Unimotion Gear	Tiengen*
Tianjin	Hückeswagen*		Product Eng. Center Utsunomiya
WIA Magna Powertrain*	Monterrey		Product Eng. Center Wetzlar
	MRPT (JV)*		Zhangjiagang*
	Plovdiv		
	Precision Tech		
	STT*		

*these locations are home to both manufacturing and engineering

Advanced Engineering

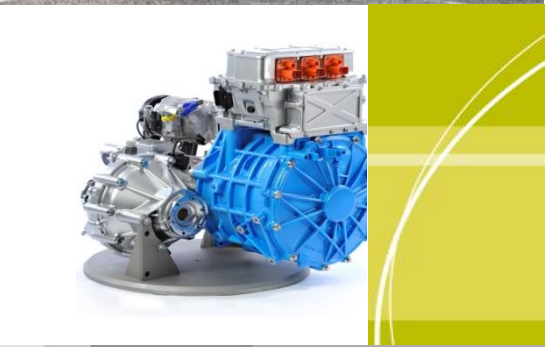

We are the innovation leader in powertrain due to latest development methods and testing facilities.
We develop and provide products and solutions for the vehicles of the future.

Key Capabilities

- System Engineering & Architecture
- **Electrification of vehicles**
- Vehicle Engineering (Cars, Trucks, Off-Road, etc.)
- Engine Engineering
- Drivetrain Engineering
- Electrics / Electronics / Mechatronics
- Simulation and Testing Services
- Technical Application Software & Support
- Prototyping and Production

Engineering Locations

- Albersdorf, Austria
- **St. Valentin, Austria**
- **Traiskirchen, Austria**
- Resende, Brazil
- Concord, Canada
- Shanghai, China
- Bad Homburg, Germany
- Delhi, India
- Pune, India
- Tokyo, Japan
- Troy, USA

Location: Traiskirchen

- Name & Address: Engineering Traiskirchen
  MAGNA Powertrain GmbH & Co KG
  Wienersdorfer Straße 20 - 24
  2514 Traiskirchen
  AUSTRIA
- Employees: 75
- Main Topic: Development of E-Drive Components & Systems

Key Competences of Engineering Center Traiskirchen

System
Development & Test

- System Concepts
- System Architecture
- System Simulations
- Safety Concept
- Requirements Management

- System Integration
- System Test

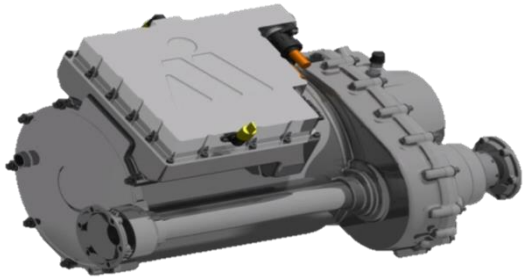

Key Competences of Engineering Center Traiskirchen

System
Development & Test

Software
Development & Test

- SW Architecture
- Base SW Development
- Functional SW Development

- SW Module Test
- SW Integration
- SW Test (HiL)

Key Competences of Engineering Center Traiskirchen

System
Development & Test

Software
Development & Test

E-Motor
Design & Test

- Electromagnetic Design
- Fluid Dynamic Simulation
- Thermal Simulation

- Design Verification

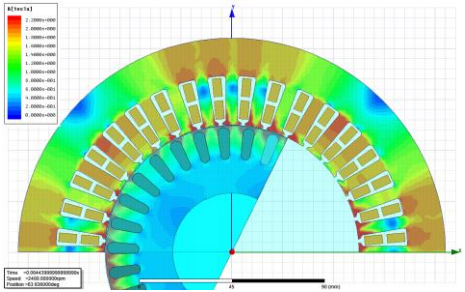

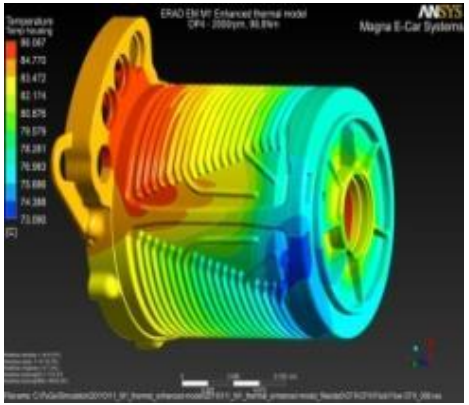

Key Competences of Engineering Center Traiskirchen

System
Development & Test

Software
Development & Test

E-Motor
Design & Test

Electronic Hardware
Development & Test

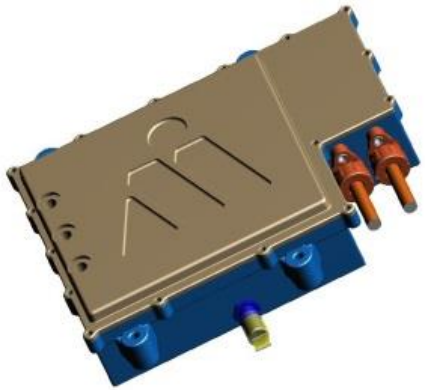

- HW Architecture
- Simulation
- HW Design (Schematics + Layout)

- Functional Verification

Key Competences of Engineering Center Traiskirchen

System
Development & Test

Software
Development & Test

E-Motor
Design & Test

Electronic Hardware
Development & Test

- Mechanical Design of E-Motor & Inverter

- Mechanical Integration

Mechanical
Design

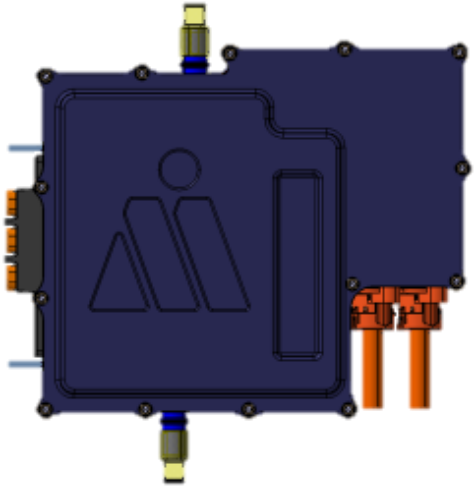

Key Competences of Engineering Center Traiskirchen

System
Development & Test

Software
Development & Test

E-Motor
Design & Test

Electronic Hardware
Development & Test

- Durability Test
- Environmental Test
- EMC Test

- Test bench management

Mechanical
Design

Verification

Key Competences of Engineering Center Traiskirchen

System
Development & Test

Software
Development & Test

E-Motor
Design & Test

Electronic Hardware
Development & Test

- Quote Preparation
- Engineering Project Management

- Quality Assurance
- Engineering Process
- SPICE / ISO Compliance

Mechanical
Design

Verification

Project Management

Key Competences of Engineering Center Traiskirchen

System
Development & Test

Software
Development & Test

E-Motor
Design & Test

Electronic Hardware
Development & Test

Engineering Center Steyr
St. Valentin

Mechanical
Design

Verification

Project Management

Power Mechanics
Design & Test

Key Competences of Engineering Center Traiskirchen

System
Development & Test

Software
Development & Test

E-Motor
Design & Test

Electronic Hardware
Development & Test

e-Drive System

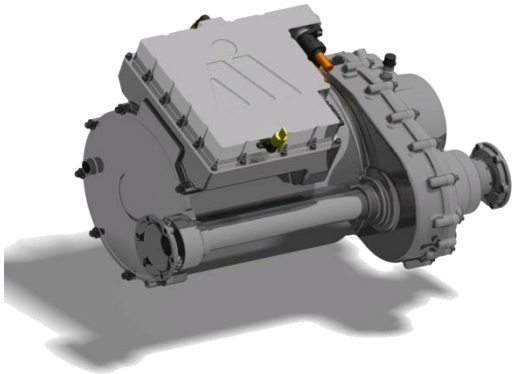

Mechanical
Design

Verification

Project Management

Power Mechanics
Design & Test

Highly Integrated Electrical Drive System

Overview

Hybrid- und EV Architectures

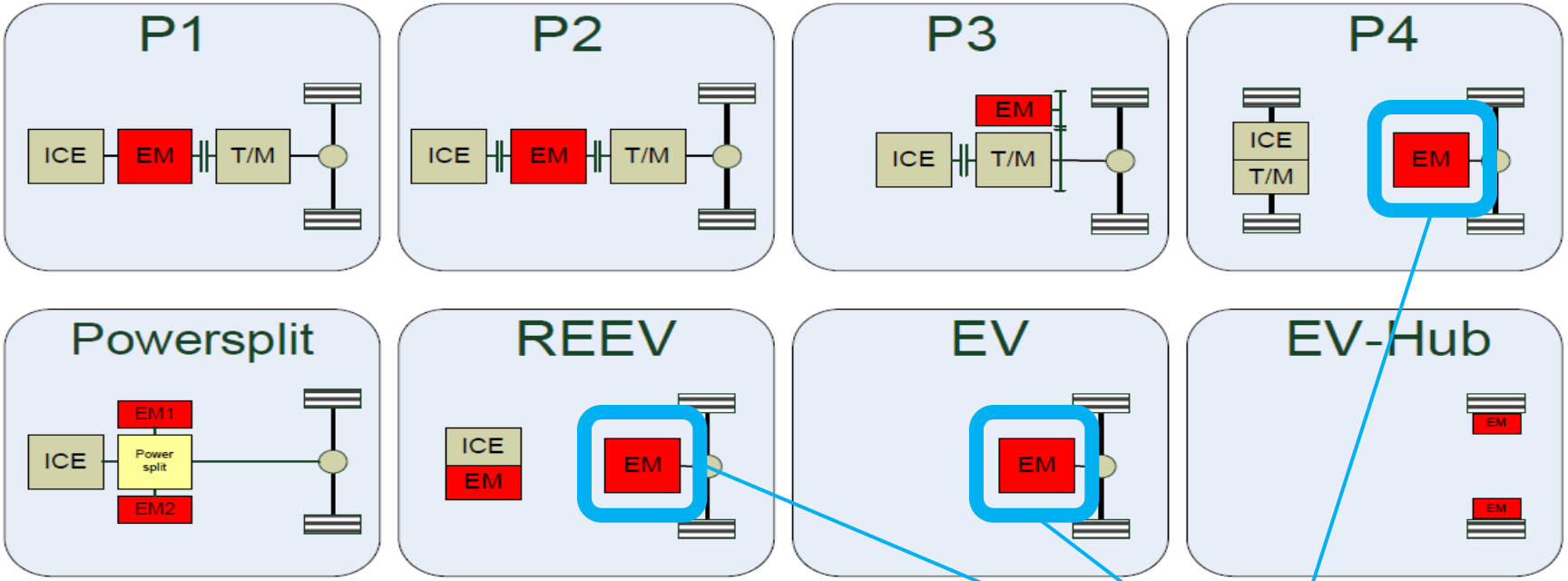

Electric Axle Drives

Usual configurations:

- P1 + P4 (Volvo V60, PSA 3008)
- P2 + P4
- Powersplit + P4 (Toyota Lexus RX)

BEV (Battery Electric Vehicle)

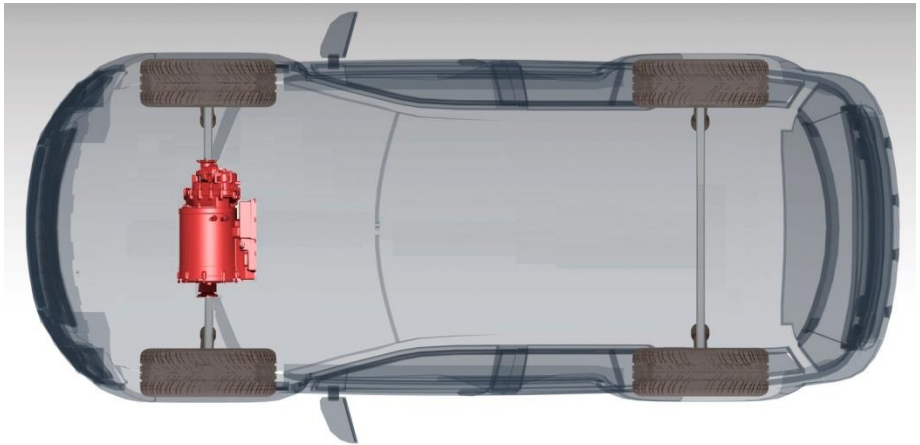

Typical example

Voltage nom. 360Vdc
Battery Capacity 25kWh
E-Motor 120kW

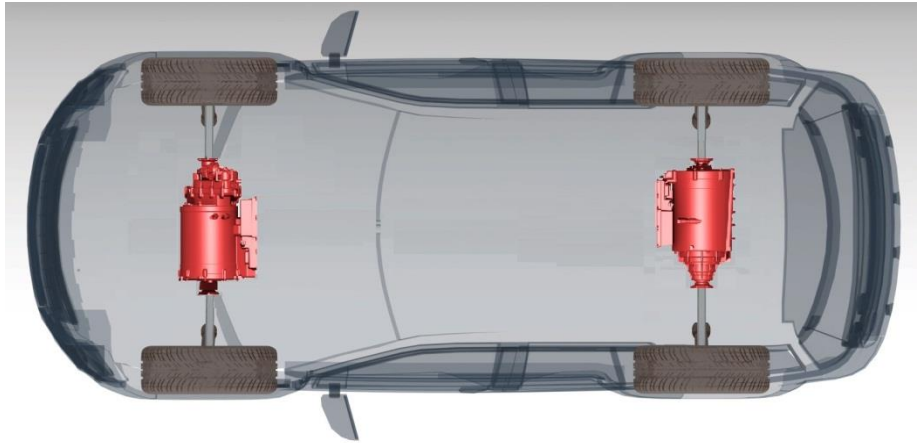

Typical example

Voltage nom. 600Vdc
Battery Capacity 100kWh
E-Motor 2x 120kW

PHEV (Plug-In Hybrid Electric Vehicle) with AWD

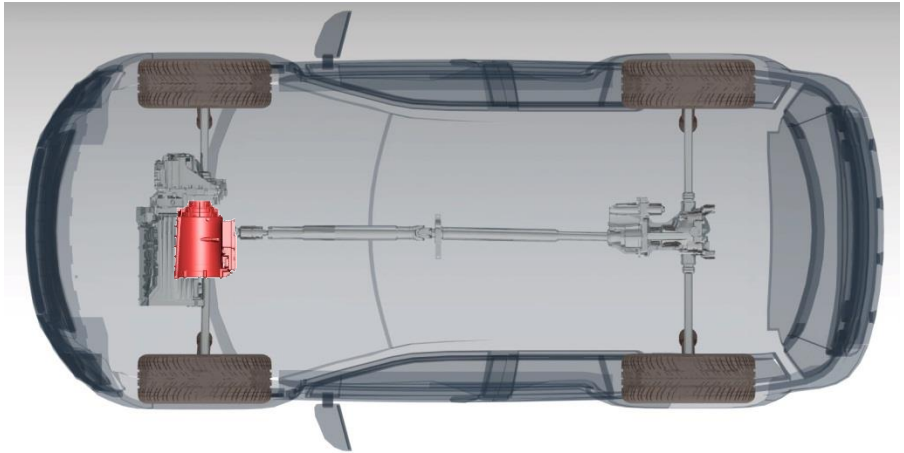

Single electric drive supports ICE on the conventional power train to both axles

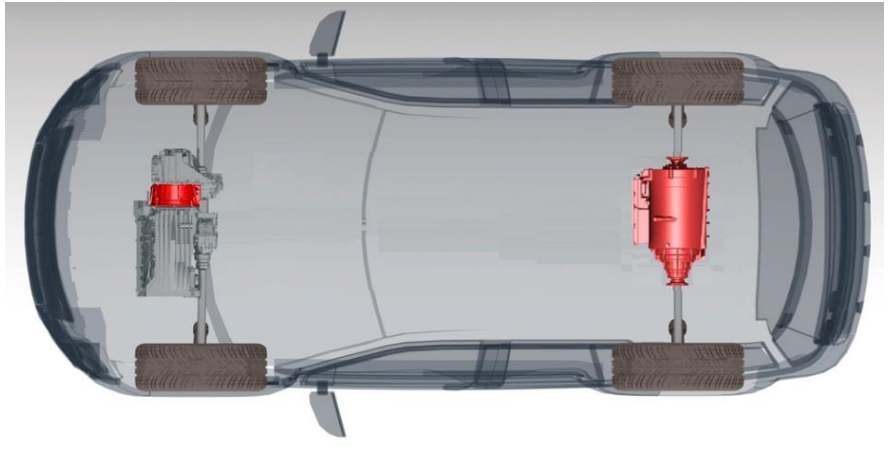

Additional rear axle drives appear typically in P2/P4 architectures

Motivation for electric axle drives in PHEV

- Using Electric Energy
  (Plug In Battery Charging)
- Recuperation

→ **Fuel Economy (CO_2 Reduction)**

- Boosting (Acceleration)
- AWD (Comfort & Safety)
- Weight balance

→ **Performance and Safety**

eAWD Today & Tomorrow

Incremental costs for car manufacturer

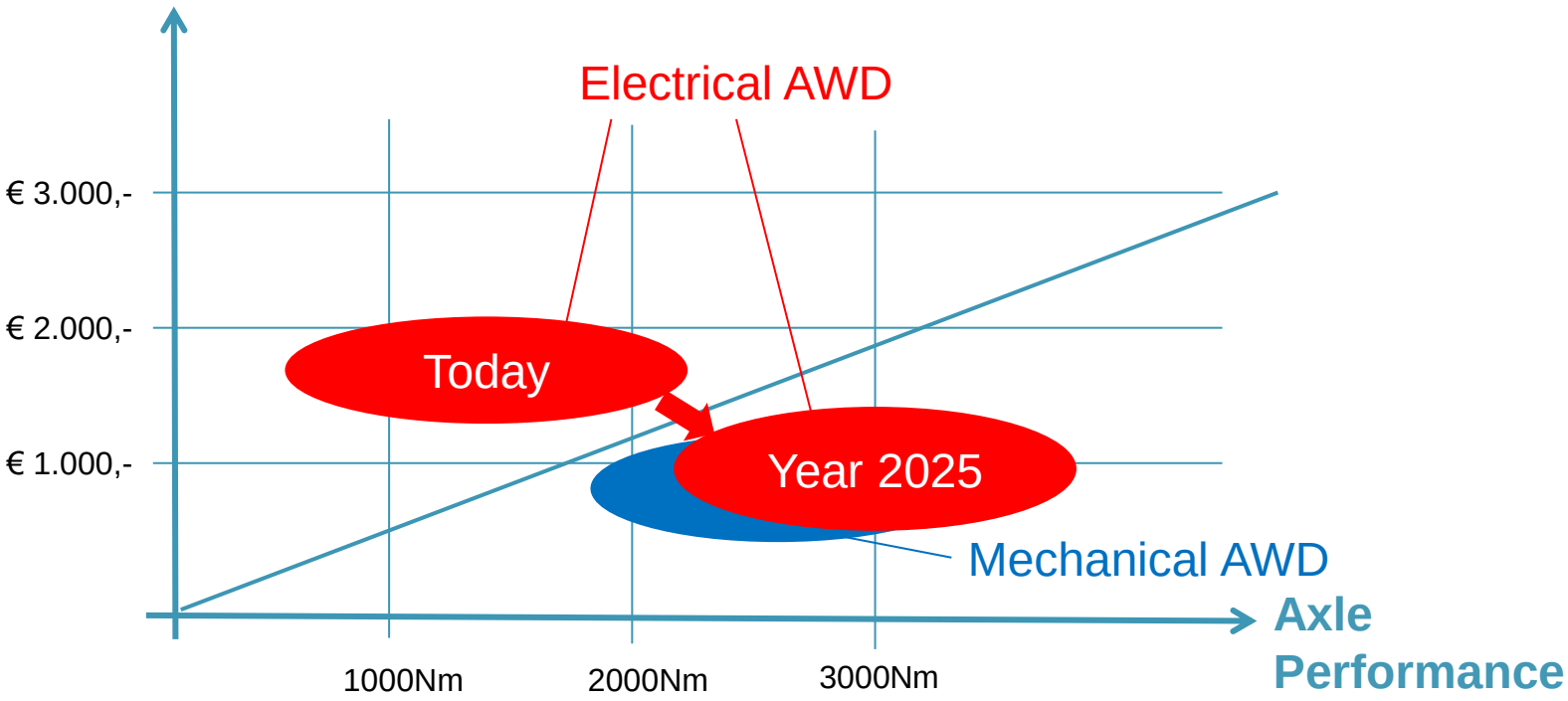

Challenges for Development

1. **Price**
   - Very tight price targets
2. **Package / Weight**
   - Different available space for different customers
   - Usually very high power density desired
3. **Performance**
   - High peak torque and power
   - High continuous torque and power
   - High efficiency
   - High torque accuracy
   - Low response time

Simplification:
- Established parts
- Platform elements

Integration:
- Share common parts
- Compact weight
- Optimized package
- Reduce number of connectors
- Reduce wiring harness
- Optimize EMC characteristics

What does integration mean?

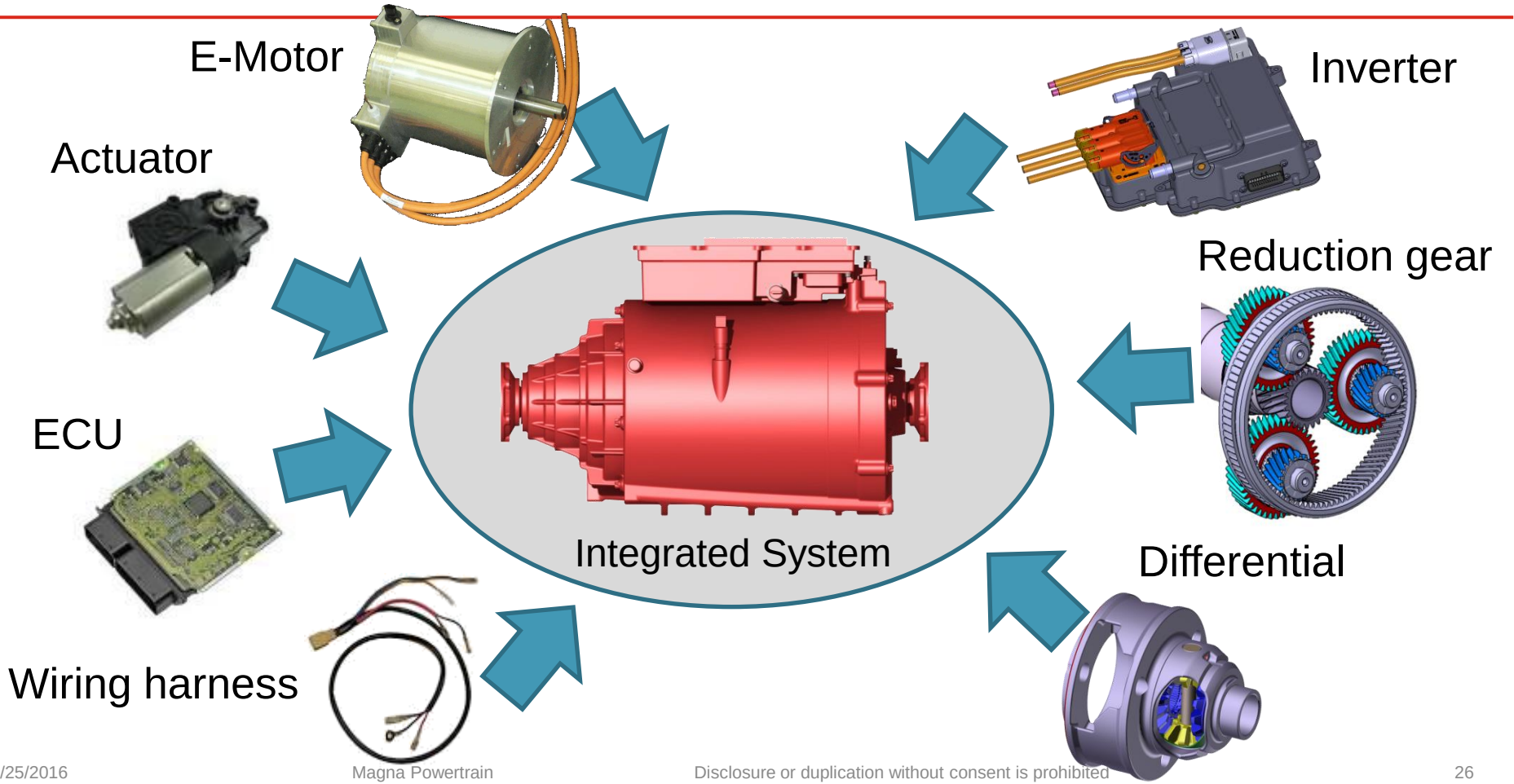

Complexity of integrated systems

Big challenge for automotive industry

System contains

- **Electronics**
- **Mechanics**
- **Hydraulics**
- **Software**

Engineering & Manufacturing

- **Resources**
- **Communications**
- **Expenditures**

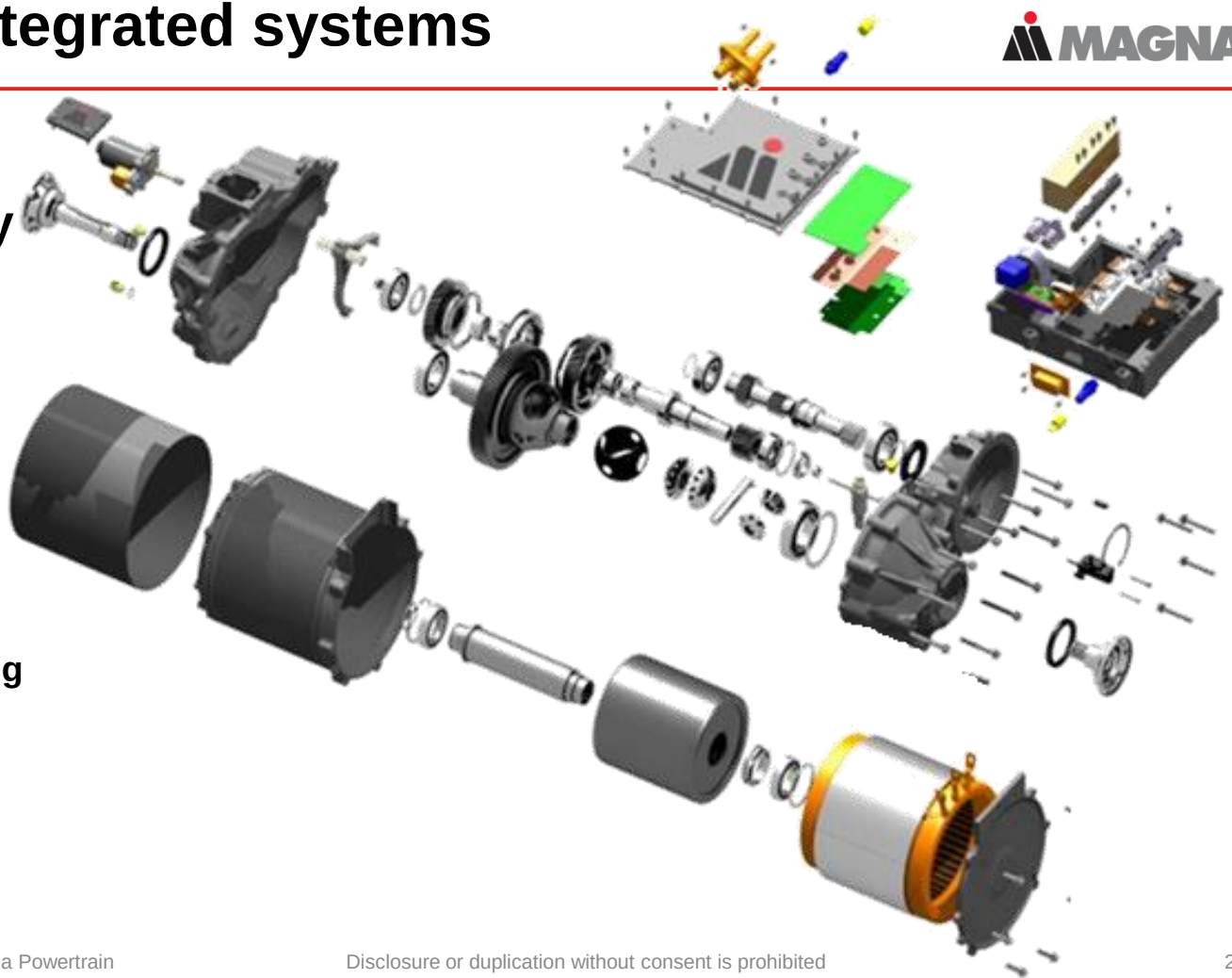

Advantages of integration?

- Number of parts can be reduced
- Number of interfaces can be reduced
- Weight optimized by common parts
- Optimize package volume
- Simplify vehicle integration
- Enhance quality
- Cover safety topics

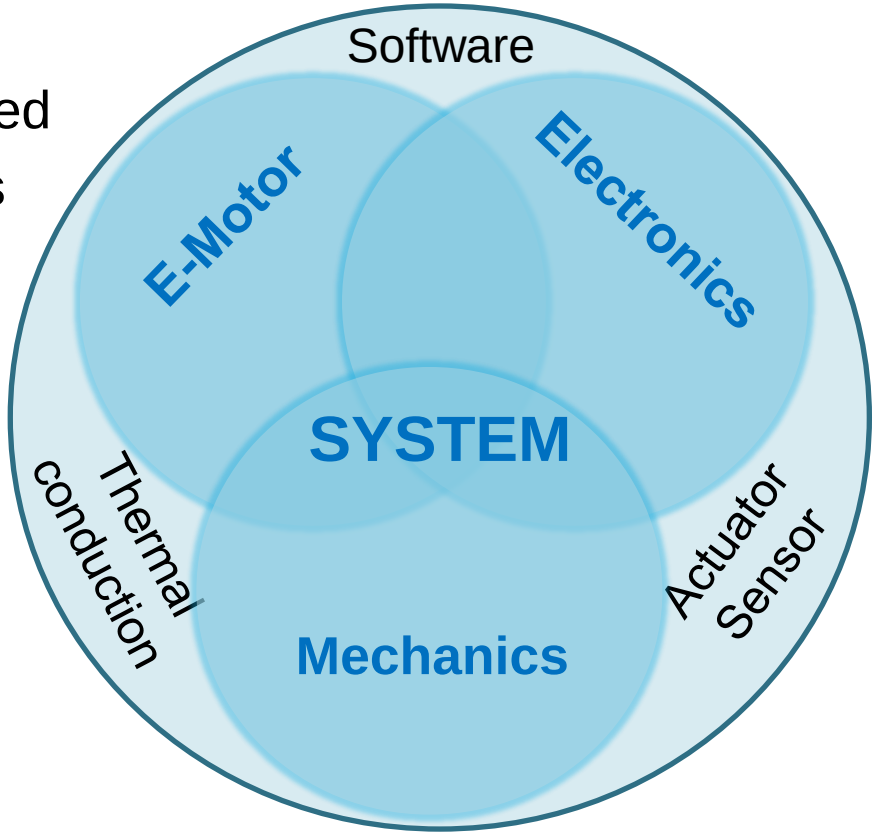

Magna‘s E-Drive Systems

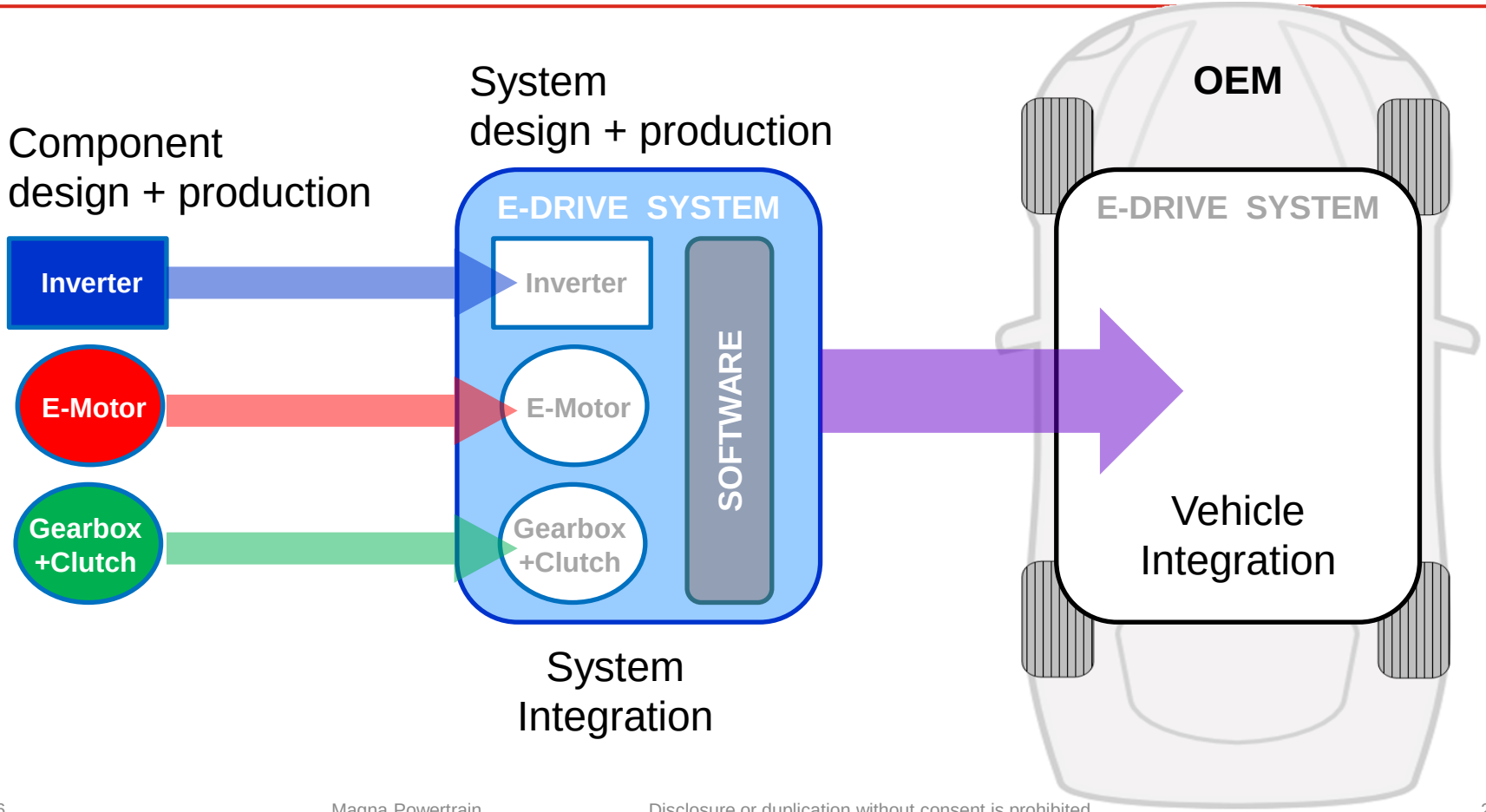

Vehicle integration is a multi-level challenge

- Integration to be done in
  - Mechanics
  - Communications
  - High voltage
  - Cooling circuits

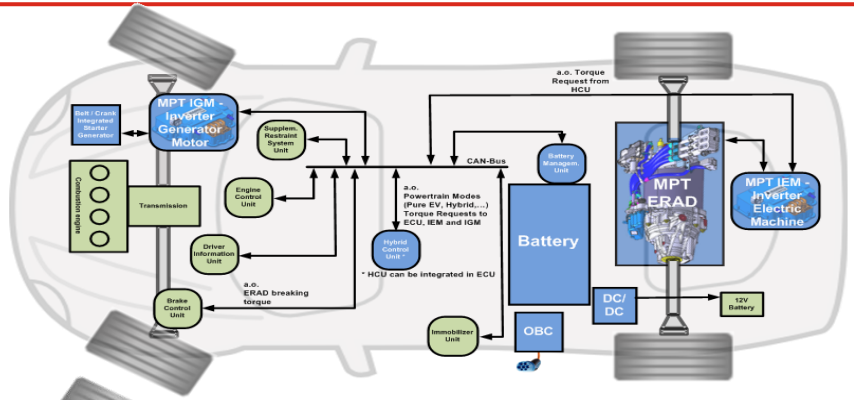

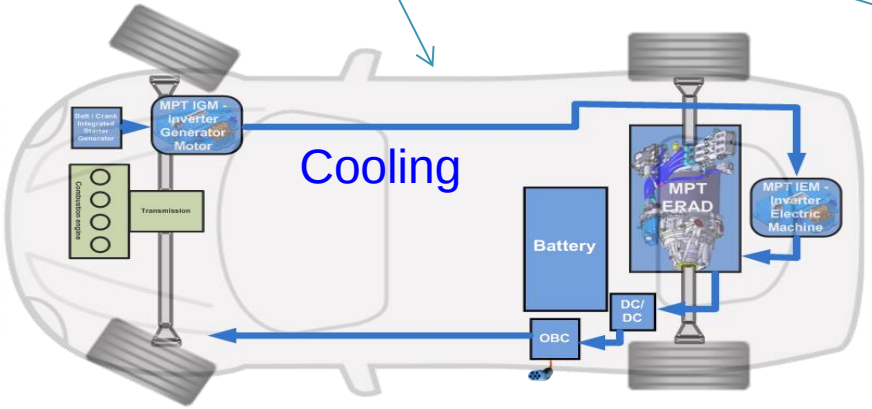

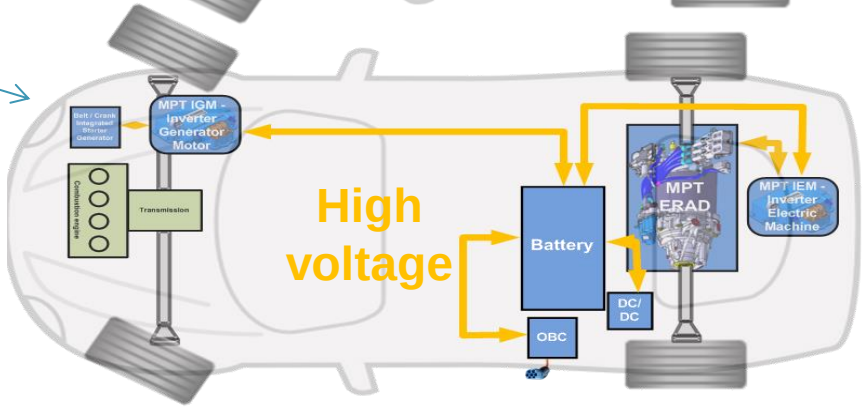

Highly Integrated Electrical Drive System

Examples

eRAD - Electric Rear Axle Drive

- Compact coaxial design with planetary gearbox
- 50kW/200Nm Permanent Magnet Synchronous Motor
- Bi-stable dog clutch for disconnecting the axle
- Gear ratio 1:9,17
- Speed range 0 - 1.400rpm at wheels
- Torque range: 0 - 1.826 Nm at wheels
- Total weight: 47kg

Separated Inverter

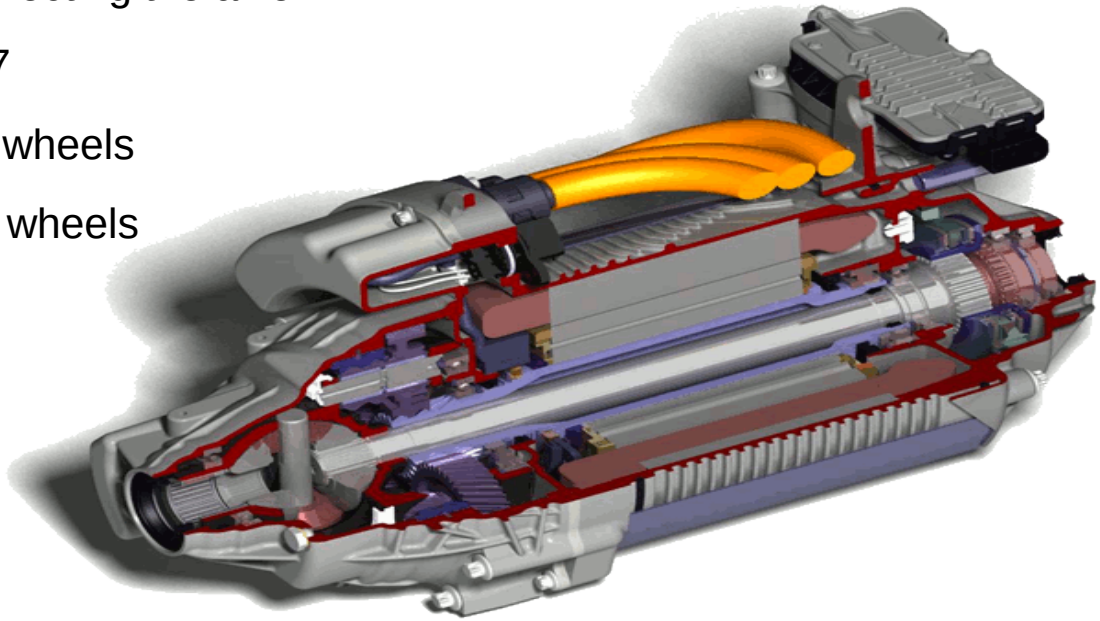

E-Motor integrated into Gearbox and Clutch

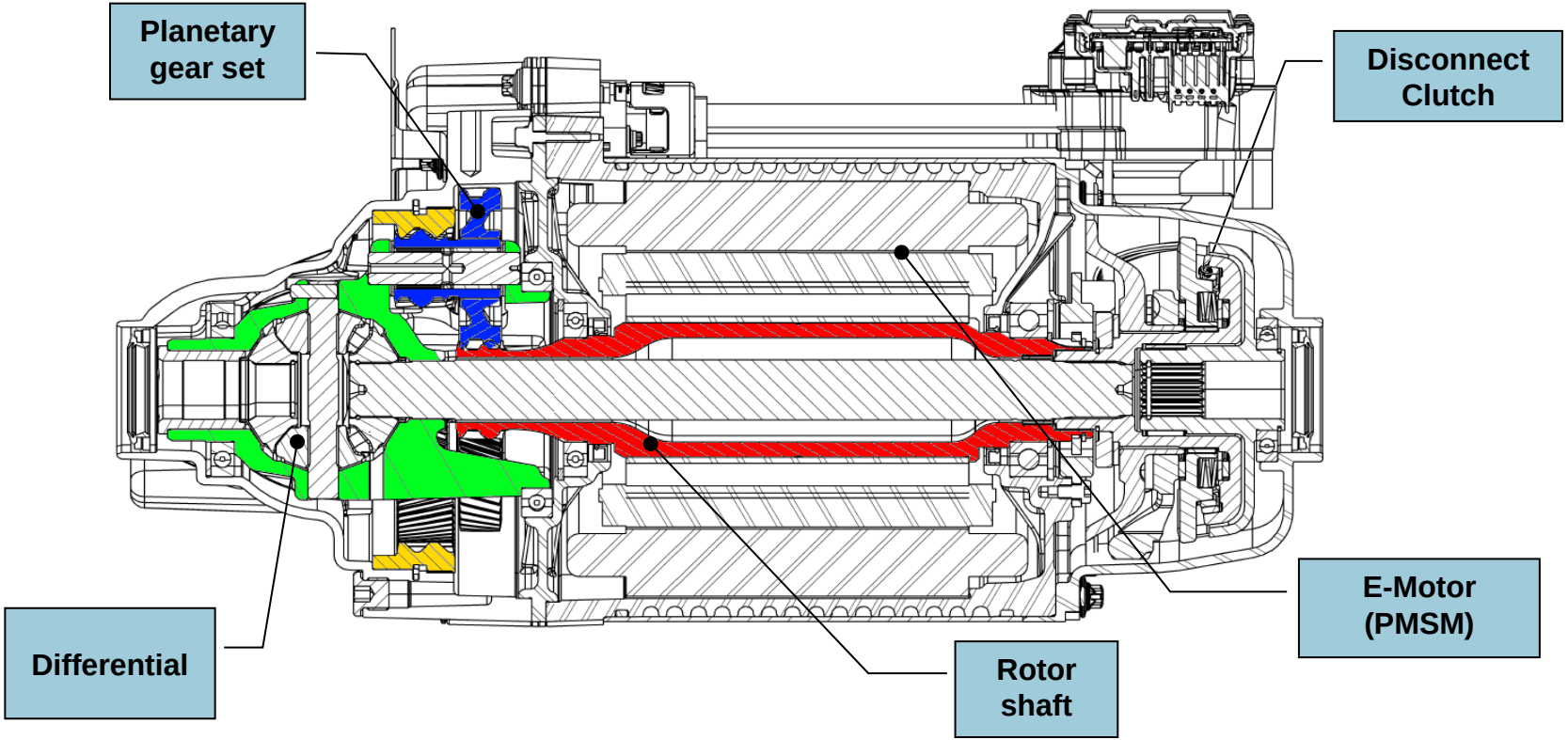

Next generation of electric axle drives

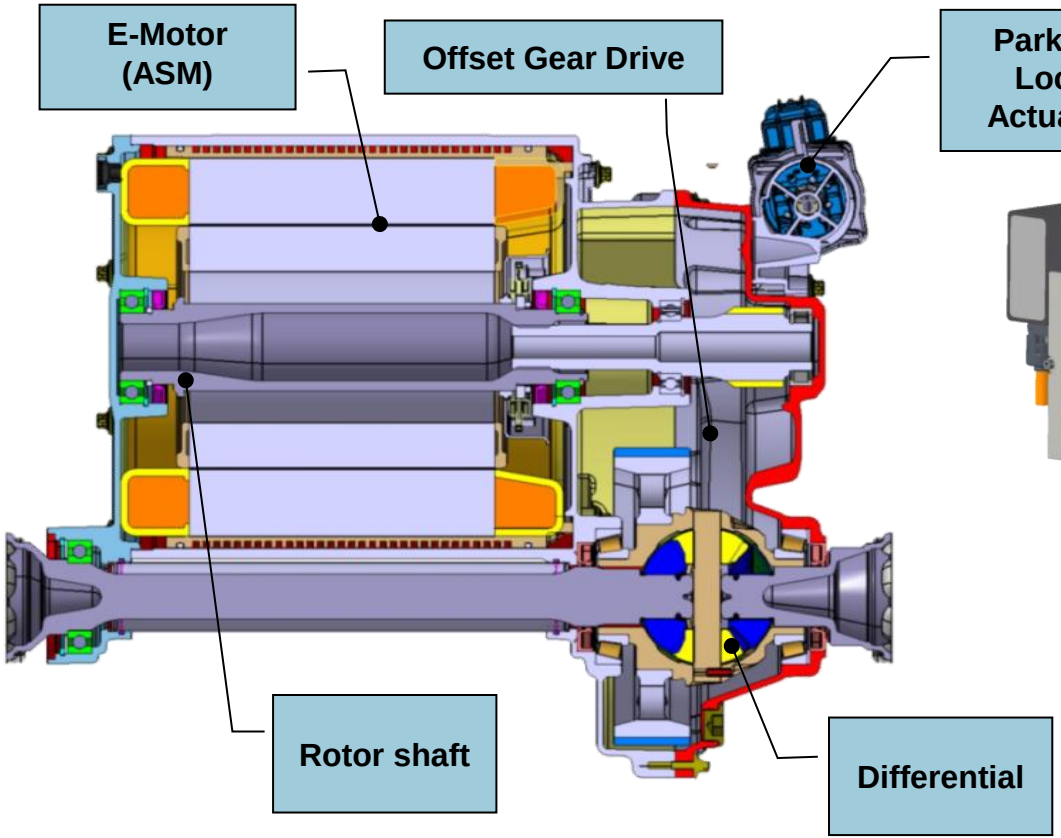

Offset Version

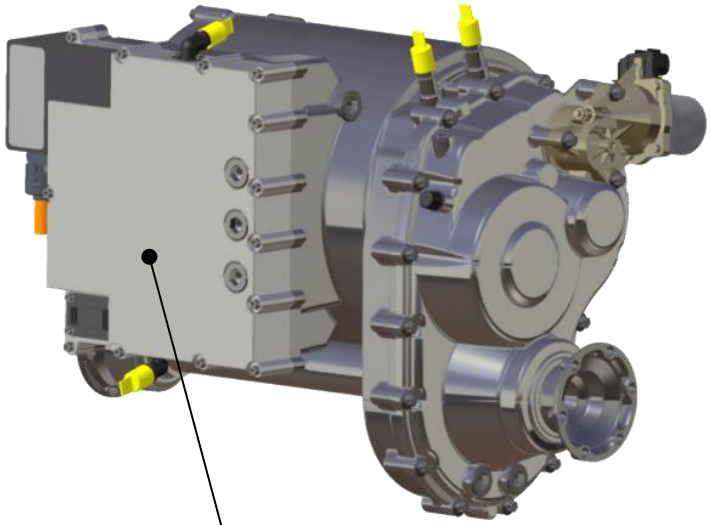

Next generation of electric axle drives

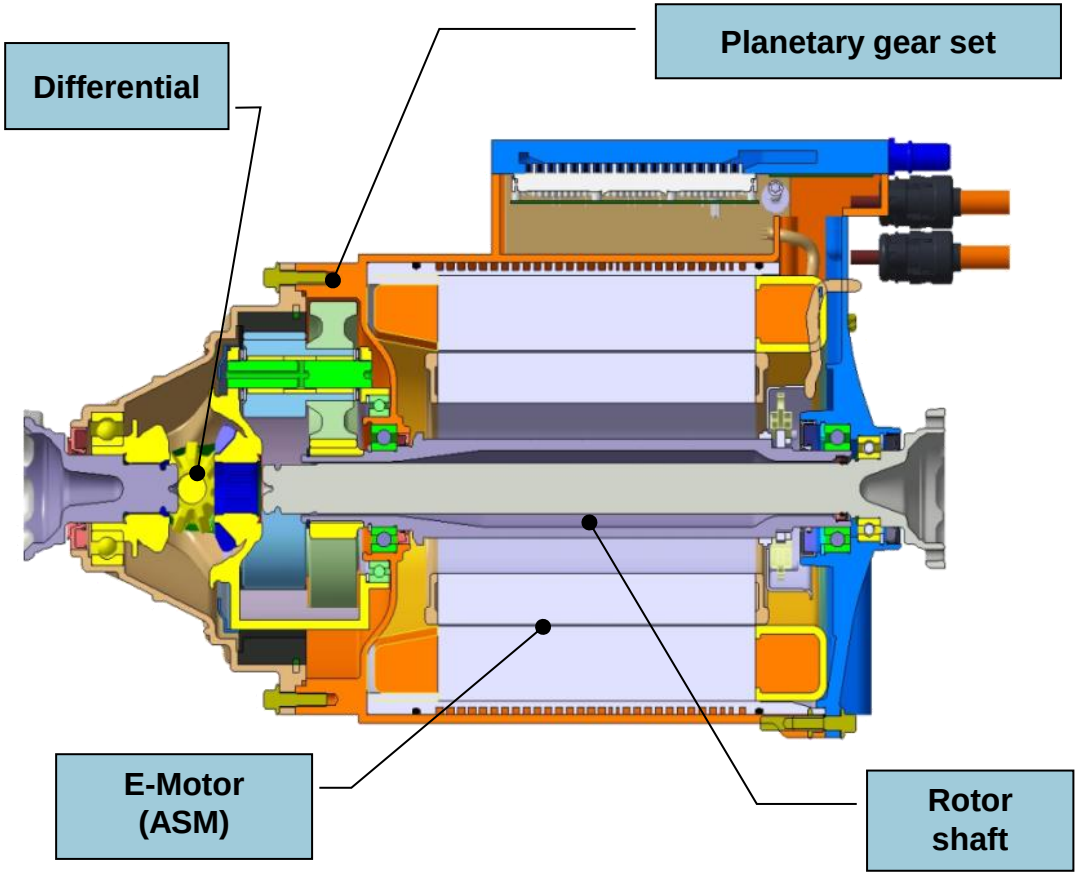

Coaxial Version

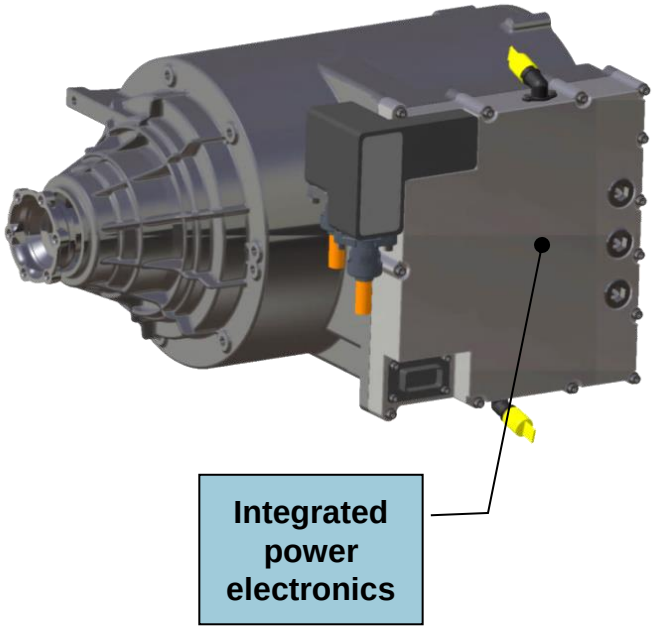

Outlook

- Electric axles will be the main powertrain in future
  - ✓ **Simple**
  - ✓ **Effective**
  - ✓ **Smart**

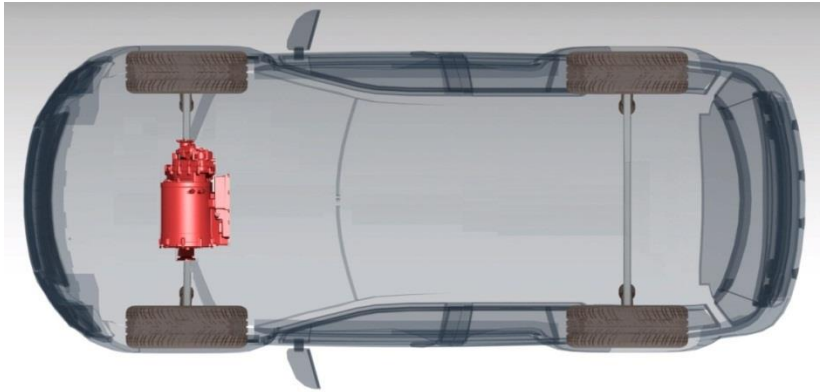

- Costs are key for pushing electric drives towards larger volumes
  - Beside the battery the entire drivetrain has to be cost effective
- High level integration is a general way for evolving technology
  - Each automotive module does also experience proceeding integration


DRIVING EXCELLENCE.
INSPIRING INNOVATION.